BEZEL

472-03-VB

CORBETT

Originally inspired by 'superflush' jewelry settings, where a stone is set into densely cast metalwork, Bezel is bold and glamorous with a sleek, decorative design. The Luna glass shades, etched on the inside, allow the LED light to radiate through, creating an enchanting glow A Vintage Brass finish adds an extra layer of elegance to this captivating fixture. Bezel is available as a 3 or 5-light sconce. Part of our No: Nozawa collection.

FINISHES

VINTAGE BRASS



DIMENSIONS / SPECS

Height: 18"
Width/Diameter: 7"
Canopy/Backplate: 5.5"
Product Weight: 5.5lb
Extension: 2.5"
Top to Center: 9"
Canopy/Backplate Shape: Round
Sloped Ceiling Compatible: No
Living Finish: Yes
Uplight Only: No

Shade 1: Glass
Shade 1 Finish: Luna Etched Inside
Shade 1 Top Width: 3.5"
Shade 1 Height: 1.5"
Shade 2: Glass
Shade 2 Finish: Luna Etched Inside
Shade 2 Top Width: 5"
Shade 2 Height: 2"

ELECTRICAL

Bulb 1
Bulb Included: N/A
Socket: Integrated LED
Bulb Type: LED
Max Wattage: 17
Bulb Quantity: 3
Cord Type: B & W TEFLON W/ GROUND WIRE
Dimmer Type: ELV, TRIAC
Gem Box Required (2"x3"): No
Dark Sky: No
Convertible: No
CRI: 90
Color Temp.: 2700k
Lumens: 350
Title 24: No
Field Serviceable: No
Voltage: 120V

Voltage: 120V
Gem Box: Not Required

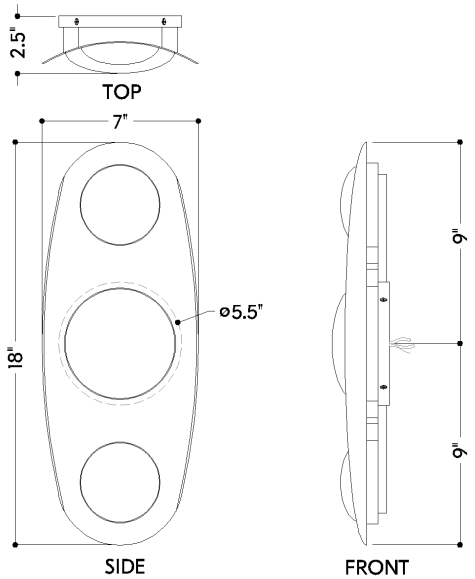

SHIPPING

Carton 1: 22" x 12" x 7"
Carton 1 Weight: 7lb
Shipping Method: Ground
Country of Origin: VN