RIVIERE

465-01-VGL

CORBETT

Inspired by Noz Nozawa's stackable rings, Riviere features a classic silhouette accented by striking details and powered by energy-efficier LED. Organic, pod-shaped heads encase ice onyx discs within a bezel setting reminiscent of the way a gemstone is set into a ring. Finished in Vintage Gold Leaf, the distinctive chain suspending the chandelier adds another jewelry-like element to the design. Riviere is available as an 8 or 10-light chandelier and a single-light sconce. Part of our Noz Nozawa collection.

*Due to the one-of-a-kind nature of the medium, exact colors and patterns may vary slightly from the image shown.

FINISHES

VINTAGE GOLD LEAF

DIMENSIONS / SPECS

Height: 15.25"
Width/Diameter: 6"
Canopy/Backplate: 4.75"
Product Weight: 5.5lb
Extension: 4.25"
Top to Center: 2.5"
Canopy/Backplate Shape: Round
Sloped Ceiling Compatible: No
Living Finish: No
Uplight Only: No

Shade 1: Onyx
Shade 1 Top Width: 5"
Shade 1 Height: 1.25"

ELECTRICAL

Bulb 1
Bulb Included: N/A
Socket: Integrated LED
Bulb Type: LED
Max Wattage: 10
Bulb Quantity: 1
Cord Type: B & W TEFLON W/ GROUND WIRE
Dimmer Type: ELV, TRIAC
Gem Box Required (2"x3"): No
Dark Sky: No
Convertible: No
CRI: 90
Color Temp.: 2700k
Lumens: 175
Title 24: No
Field Serviceable: No
Voltage: 120V

Voltage: 120V
Gem Box: Not Required

SHIPPING

Carton 1: 20" x 11" x 11"
Carton 1 Weight: 6lb
Shipping Method: Ground
Country of Origin: PH



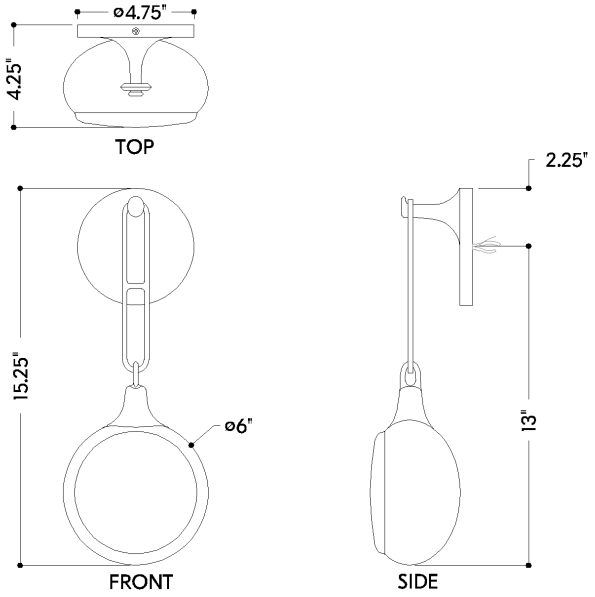

HUDSON VALLEY
LIGHTING GROUP