LARIAT

463-02-VB

CORBETT

Recalling Roman antiquities, the Lariat family strikes a balance between clean, straight lines and the fluidity of swooping jewelry chains. The unique, custom-inspired design features a series of tubular alabaster shades with elegant drapery and intricately knurled metalwork. The natural alabaster glows beautifully when illuminated. Lariat is available as a 2-light linear fixture or a 4-light chandelier with a Vintage Brass finish. Part of our Noz Nozawa collection.

*Due to the one-of-a-kind nature of the medium, exact colors and patterns may vary slightly from the image shown.

FINISHES

VINTAGE BRASS

DIMENSIONS / SPECS

Height: 16.25"
Width/Diameter: 7.75"
Length: 48.75"
Minimum Height: 31"
Maximum Height: 65.75"
Canopy/Backplate: 7.75"
Hanging Type: 1-6" / 2-12" / 1-18" Stems
Product Weight: 26.48lb
Canopy/Backplate Shape: Round
Sloped Ceiling Compatible: No
Living Finish: Yes
Uplight Only: No

Shade 1: Alabaster
Shade 1 Top Length: 19.75"
Shade 1 Top Width: 2.25"
Shade 2: Acrylic
Shade 2 Finish: Opal Shiny
Shade 2 Top Length: 19.75"
Shade 2 Top Width: 1"

ELECTRICAL

Bulb 1
Bulb Included: N/A
Socket: Integrated LED
Max Wattage: 29
Bulb Quantity: 2
Cord Type: B & W TEFLON W/ GROUND WIRE
Dimmer Type: ELV, TRIAC, 0-10 VOLT
Gem Box Required (2"x3"): No
Dark Sky: No
Convertible: No
CRI: 90
Color Temp.: 2700k
Lumens: 1050
Title 24: No
Field Serviceable: No
Voltage: 120V TO 277V

Voltage: 120V TO 277V

SHIPPING

Carton 1: 57" x 18" x 7"
Carton 1 Weight: 31lb
Shipping Method: Ground
Country of Origin: VN



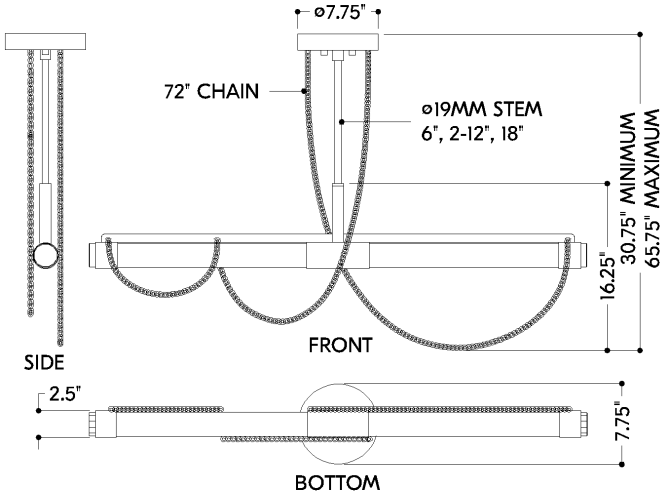

HUDSON VALLEY
LIGHTING GROUP