ARES

458-01-VB

CORBETT

Reminiscent of a dangling jewelry charm, Ares lends an otherworldly beauty to modern interiors. When illuminated, the central LED-lit ice onyx lens glows with a mesmerizing mother-of-pearl-like iridescence. Subtle details, from the stone finial detail to the ribbed metalwork, contribute to the artisanal feel of this wall light. Finished in warm Vintage Brass, Ares adds a note of luxury to a hallway, powder room, or bedside.

*Due to the one-of-a-kind nature of the medium, exact colors and patterns may vary slightly from the image shown.

FINISHES

VINTAGE BRASS

DIMENSIONS / SPECS

Height: 16.75"
Width/Diameter: 9.75"
Canopy/Backplate: 5"
Product Weight: 10.36lb
Extension: 4.5"
Top to Center: 2.5"
Canopy/Backplate Shape: Round
Sloped Ceiling Compatible: No
Living Finish: Yes
Uplight Only: No

Shade 1: Onyx
Shade 1 Finish: Ice
Shade 1 Top Width: 9.5"
Shade 1 Height: 2.25"

ELECTRICAL

Bulb 1
Bulb Included: N/A
Socket: Integrated LED
Max Wattage: 16
Bulb Quantity: 1
Cord Type: B & W TEFLON W/ GROUND WIRE
Dimmer Type: ELV, TRIAC
Gem Box Required (2"x3"): No
Dark Sky: No
Convertible: No

CRI: 90
Color Temp.: 2700k
Lumens: 275
Title 24: No
Field Serviceable: No
Voltage: 120V

Voltage: 120V
Gem Box: Not Required

SHIPPING

Carton 1: 21" x 15" x 11"
Carton 1 Weight: 14lb
Shipping Method: Ground
Country of Origin: VN



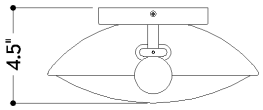

TOP

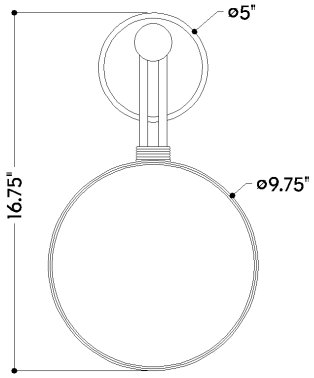

SIDE

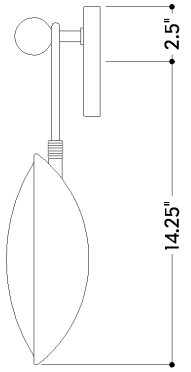

FRONT

HUDSON VALLEY
LIGHTING GROUP