ATOM

452-02-VB

CORBETT

A nature-inspired spin on an iconic mid-century sputnik design, Atom brings a burst of illumination to modern interiors. This dynamic composition features glass spheres and cylinders that are brilliantly lit by energy-efficient LEDs. The reeded detailing of the arms is accented by smooth metalwork in a Vintage Brass finish. Atom is available as a 2-light wall sconce and 10 or 13-light chandeliers.

FINISHES

VINTAGE BRASS



DIMENSIONS / SPECS

Height: 27.5"
Width/Diameter: 5.5"
Canopy/Backplate: 5"
Product Weight: 5.5lb
Extension: 6.5"
Top to Center: 8.25"
Canopy/Backplate Shape: Round
Sloped Ceiling Compatible: No
Living Finish: Yes
Uplight Only: No

Shade 1: Glass
Shade 1 Finish: Clear
Shade 1 Top Width: 5.5"
Shade 1 Height: 5.25"
Shade 2: Glass
Shade 2 Finish: Clear
Shade 2 Top Width: 3.25"
Shade 2 Height: 16.25"

ELECTRICAL

Bulb 1
Bulb Included: N/A
Socket: Integrated LED
Bulb Type: LED
Max Wattage: 12
Bulb Quantity: 2
Cord Type: B & W TEFLON W/ GROUND WIRE
Dimmer Type: ELV, TRIAC
Gem Box Required (2"x3"): No
Dark Sky: No
Convertible: No
CRI: 90
Color Temp.: 2700k
Lumens: 550
Title 24: No
Field Serviceable: No
Voltage: 120V

Voltage: 120V
Gem Box: Not Required

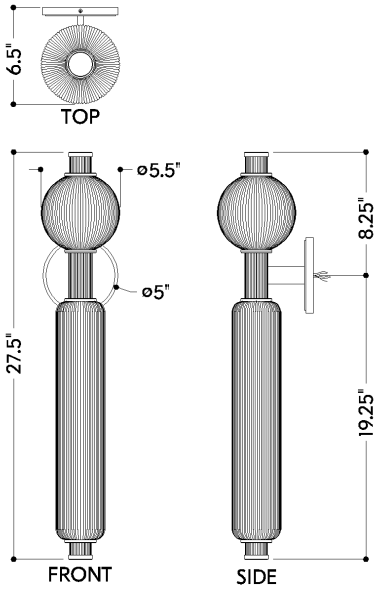

SHIPPING

Carton 1: 21" x 20" x 8"
Carton 1 Weight: 9lb
Shipping Method: Ground
Country of Origin: VN