EDGEMERE

4051-AGB

HUDSON VALLEY LIGHTING

A modern 'air lantern' design with a bold architectural silhouette. In lieu of a central light source, LED strips are integrated into the cage o Edgemere itself. A rectangular panel of alabaster is attached to each arm, creating a geometric array of light within the piece. The sleek mixed materiality feels grand and traditional with a futuristic edge. Available in a 3 or 4-light pendant in Aged Brass or Aged Brass and Distressed Bronze or a single light sconce in Aged Brass or Distressed Bronze.

FINISHES

AGED BRASS

DIMENSIONS / SPECS

Height: 66"
Width/Diameter: 66"
Length: 66"
Minimum Height: 66"
Maximum Height: 66"
Canopy/Backplate: 2.5"
Hanging Type: 108" Premium Composite Cord
Product Weight: 66lb
Extension: 66"
Top to Center: 66"
Canopy/Backplate Shape: Rectangle
Sloped Ceiling Compatible: No
Living Finish: Yes
Uplight Only: Yes
Min Extension: 66"
Max Extension: 66"

Shade 1: Alabaster
Shade 1 Top Width: 1.5"
Shade 1 Height: 22"



ELECTRICAL

Bulb 1
Bulb Included: N/A
Socket: Integrated LED
Max Wattage: 8
Bulb Quantity: 1
Wire Length: 500mm
Cord Type: ! New Cord Type
Dimmer Type: Incandescent
Switch Type: ON/OFF STOMP SWITCH
Gem Box Required (2"x3"): Yes
Dark Sky: Yes
Convertible: No
CRI: 66
Color Temp.: 66k
Lumens: 66
Title 24: Yes
Field Serviceable: No
Voltage: 120V

Voltage: 120V
Gem Box: Required

Battery
Battery Powered: Yes
Battery Included: Yes
Battery Life: ! New Battery Life !

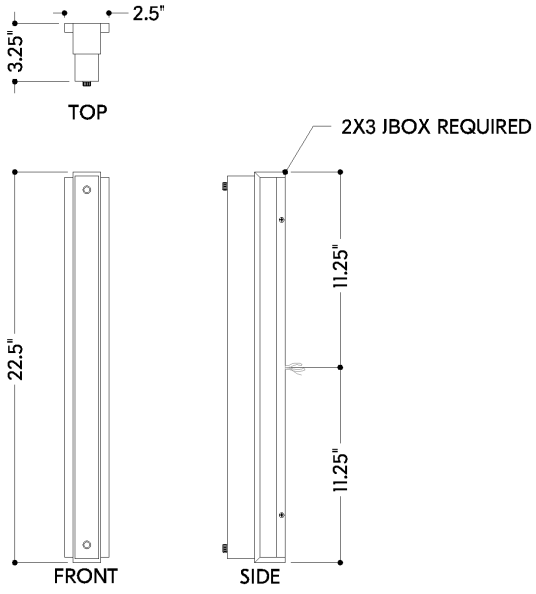

EDGEMERE

4051-AGB

HUDSON VALLEY LIGHTING

SHIPPING

Carton 1: 28" x 7" x 7"
Carton 1 Weight: 8lb
Shipping Method: Ground
Country of Origin: CN