HINGHAM

3917-AGB

HUDSON VALLEY LIGHTING

With an elaborately swirled framework, Hingham transports you to the Golden Age of design. Tendrils of Aged Brass wrap around large cloud glass orbs, which seem to float as they emit a soft radiance. Available as a standing lamp, chandelier, or sconce, Hingham is the picture of timeless style.

FINISHES

AGED BRASS

DIMENSIONS / SPECS

Height: 66"
Width/Diameter: 66"
Length: 66"
Minimum Height: 66"
Maximum Height: 66"
Canopy/Backplate: 4.75"
Hanging Type: 108" Premium Composite Cord
Product Weight: 66lb
Extension: 66"
Top to Center: 66"
Canopy/Backplate Shape: Round
Sloped Ceiling Compatible: No
Living Finish: Yes
Uplight Only: Yes
Min Extension: 66"
Max Extension: 66"

Shade 1: Glass
Shade 1 Finish: Cloud
Shade 1 Top Width: 9"
Shade 1 Height: 8.5"



ELECTRICAL

Bulb 1
Bulb Included: No
Socket: E26 Medium Base
Bulb Type: A19
Max Wattage: 15
Bulb Quantity: 2
Wire Length: 500mm
Cord Type: ! New Cord Type
Dimmer Type: Incandescent
Switch Type: ON/OFF STOMP SWITCH
Gem Box Required (2"x3"): Yes
Dark Sky: Yes
Convertible: No

CRI: 66
Color Temp.: 66k
Lumens: 66
Title 24: Yes
Field Serviceable: No
Voltage: 120 VAC

Voltage: 120 VAC
Gem Box: Required

Battery
Battery Powered: Yes
Battery Included: Yes
Battery Life: ! New Battery Life !

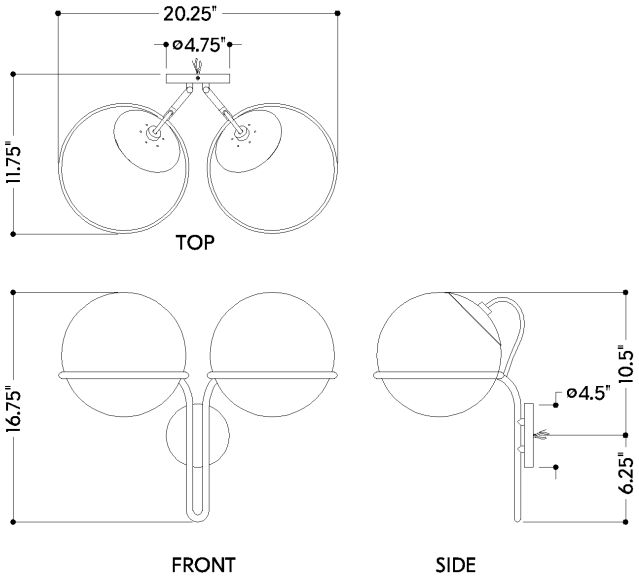

HINGHAM

3917-AGB

HUDSON VALLEY LIGHTING

SHIPPING

Carton 1: 25" x 17" x 14"
Carton 1 Weight: 13lb
Shipping Method: Ground
Country of Origin: VN