LAKEPORT

3824-VPT

HUDSON VALLEY LIGHTING

The beauty of Lakeport lies in its dignified, understated details. This slender sconce features a classic torch silhouette marked by distinctiv metalwork. A vertically fluted tail supports a series of stacked decorative spheres, creating a softly modern rhythm. Topped with a small cylindrical shade and finished in Aged Brass or Vintage Pewter, Lakeport adds refinement to a bedside or powder room.

FINISHES

VINTAGE PEWTER



DIMENSIONS / SPECS

Height: 66"
Width/Diameter: 66"
Length: 66"
Minimum Height: 66"
Maximum Height: 66"
Canopy/Backplate: 4.75"
Hanging Type: 108" Premium Composite Cord
Product Weight: 66lb
Extension: 66"
Top to Center: 66"
Canopy/Backplate Shape: Round
Sloped Ceiling Compatible: No
Living Finish: Yes
Uplight Only: Yes
Min Extension: 66"
Max Extension: 66"

Shade 1: Linen
Shade 1 Finish: White
Shade 1 Top Width: 4.5"
Shade 1 Height: 7.75"

ELECTRICAL

Bulb 1
Bulb Included: No
Socket: E12 Candelabra Base
Bulb Type: B11
Max Wattage: 10
Bulb Quantity: 1
Wire Length: 500mm
Cord Type: ! New Cord Type
Dimmer Type: Incandescent
Switch Type: ON/OFF STOMP SWITCH
Gem Box Required (2"x3"): Yes
Dark Sky: Yes
Convertible: No
CRI: 66
Color Temp.: 66k
Lumens: 66
Title 24: Yes
Field Serviceable: No
Voltage: 120

Voltage: 120
Gem Box: Required

Battery
Battery Powered: Yes
Battery Included: Yes
Battery Life: ! New Battery Life !

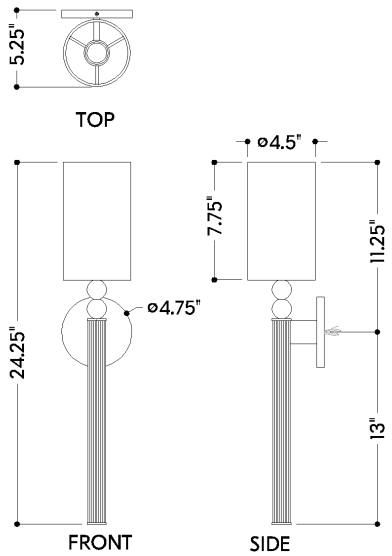

LAKEPORT

3824-VPT

HUDSON VALLEY LIGHTING

SHIPPING

Carton 1: 22" x 13" x 10"
Carton 1 Weight: 7lb
Shipping Method: Ground
Country of Origin: VN