AZZURRA

381-01-VB

CORBETT

Sculpted from a single piece of Ice Onyx, Azzurra emits a highly atmospheric, lit-from-within glow. The mesmerizing color striations vary slightly piece by piece, making this oblong sconce unique to your home or hallway. A concealed LED emanates a warm, welcoming glow when lit.

*Due to the one-of-a-kind nature of the medium, exact colors and patterns may vary slightly from the image shown.

FINISHES

VINTAGE BRASS

DIMENSIONS / SPECS

Height: 15"
Width/Diameter: 7.75"
Canopy/Backplate: 0.75"
Product Weight: 11.29lb
Extension: 3"
Canopy/Backplate Shape: Rectangle
Sloped Ceiling Compatible: No
Living Finish: Yes
Uplight Only: No

Shade 2: Natural Stone
Shade 2 Top Length: 7.75"
Shade 2 Top Width: 15"
Shade 2 Height: 3"

ELECTRICAL

Bulb 1
Bulb Included: N/A
Socket: Integrated LED
Bulb Type: LED
Max Wattage: 14
Bulb Quantity: 1
Dimmer Type: ELV, TRIAC
Gem Box Required (2"x3"): No
Dark Sky: No
Convertible: No
CRI: 90
Color Temp.: 2700k
Lumens: 500
Title 24: No
Field Serviceable: Yes
Voltage: 120V

Voltage: 120V
Gem Box: Not Required

SHIPPING

Carton 1: 19" x 12" x 9"
Carton 1 Weight: 14lb
Shipping Method: Ground
Country of Origin: VN



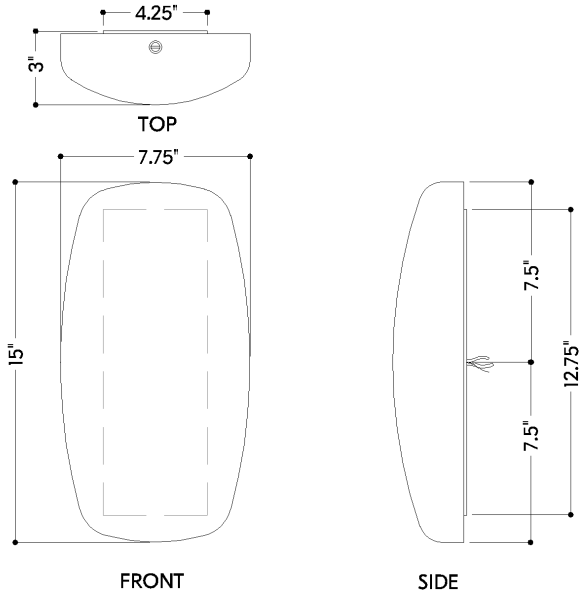

HUDSON VALLEY
LIGHTING GROUP