FREYA

380-20-VB

CORBETT

A frosty chill meets the warmth of LED in this sculptural pendant light. Resembling sheets of ice, four thin Piastra glass blades with chill marks extend from a central opal glossy glass core. A Vintage Brass framework provides a golden glow that enhances this pendant's sparkle when lit.

*Due to the one-of-a-kind nature of the medium, exact colors and patterns may vary slightly from the image shown.



FINISHES

VINTAGE BRASS

DIMENSIONS / SPECS

Height: 14"
Width/Diameter: 20.25"
Minimum Height: 21.75"
Maximum Height: 63.75"
Canopy/Backplate: 4.75"
Product Weight: 20.13lb
Canopy/Backplate Shape: Round
Sloped Ceiling Compatible: No
Living Finish: Yes
Uplight Only: No

Shade 1: Piastre Glass
Shade 1 Finish: Clear
Shade 1 Top Length: 8.75"
Shade 1 Top Width: 9.5"
Shade 1 Height: 0.25"
Shade 2: Glass
Shade 2 Finish: Opal Shiny
Shade 2 Top Width: 2"
Shade 2 Height: 8.25"

ELECTRICAL

Bulb 1
Bulb Included: N/A
Socket: Integrated LED
Bulb Type: LED
Max Wattage: 13
Bulb Quantity: 1
Dimmer Type: ELV, TRIAC
Gem Box Required (2"x3"): No
Dark Sky: No
Convertible: No
CRI: 90
Color Temp.: 2700k
Lumens: 825
Title 24: No
Field Serviceable: No
Voltage: 120V

Voltage: 120V

SHIPPING

Carton 1: 22" x 20" x 13"
Carton 1 Weight: 24lb
Shipping Method: Ground
Country of Origin: VN

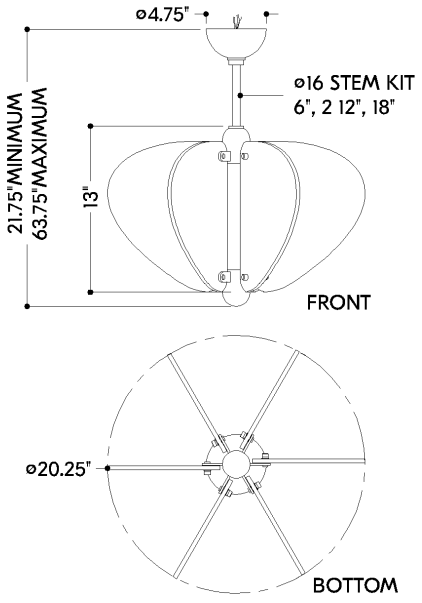

HUDSON VALLEY
LIGHTING GROUP