GLEN OAKS

3726-AGB

HUDSON VALLEY LIGHTING

A minimalist silhouette is elevated by mechanical metalwork in Glen Oaks. This narrow sconce features two cylinders of seedy opal glass attached to a slim rectangular backplate. Adding a clean-lined detail, the two socket cups are connected with slender metal straps. Whether in the Aged Brass or Vintage Pewter finish, Glen Oaks brings elegant simplicity to a bath area.

FINISHES

AGED BRASS

DIMENSIONS / SPECS

Height: 66"
Width/Diameter: 66"
Length: 66"
Minimum Height: 66"
Maximum Height: 66"
Canopy/Backplate: 4.25"
Hanging Type: 108" Premium Composite Cord
Product Weight: 66lb
Extension: 66"
Top to Center: 66"
Canopy/Backplate Shape: Rectangle
Sloped Ceiling Compatible: No
Living Finish: Yes
Uplight Only: Yes
Min Extension: 66"
Max Extension: 66"

Shade 1: Glass
Shade 1 Finish: Opal Seedy
Shade 1 Top Width: 2.25"
Shade 1 Height: 10.5"



ELECTRICAL

Bulb 1
Bulb Included: No
Socket: E26 Medium Base
Bulb Type: T10-9
Max Wattage: 15
Bulb Quantity: 2
Wire Length: 500mm
Cord Type: ! New Cord Type
Dimmer Type: Incandescent
Switch Type: ON/OFF STOMP SWITCH
Gem Box Required (2"x3"): Yes
Dark Sky: Yes
Convertible: No

CRI: 66
Color Temp.: 66k
Lumens: 66
Title 24: Yes
Field Serviceable: No
Voltage: 120

Voltage: 120
Gem Box: Required

Battery
Battery Powered: Yes
Battery Included: Yes
Battery Life: ! New Battery Life !

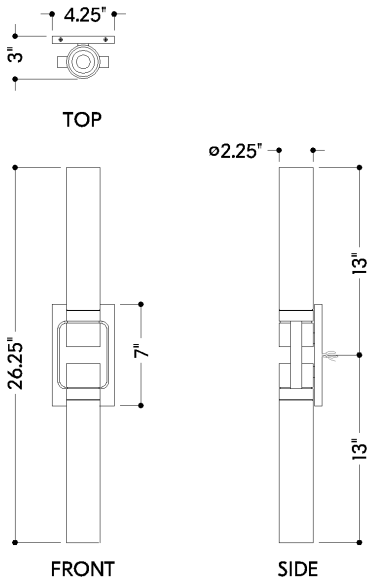

GLEN OAKS

3726-AGB

HUDSON VALLEY LIGHTING

SHIPPING

Carton 1: 15" x 15" x 8"
Carton 1 Weight: 6lb
Shipping Method: Ground
Country of Origin: VN