LINDENWOOD

3420-AGB

HUDSON VALLEY LIGHTING

Wrapped, woven, and precision-fitted elements elevate the traditional silhouette of Lindenwood. Creating an exciting conversation between natural and manmade elements, the Aged Brass metalwork supports grasscloth-covered stems and shades. Available as a 1-light sconce and a 6 and 9-light chandelier, Lindenwood fixtures layer well together in a contemporary space.

*Due to the one-of-a-kind nature of the medium, exact colors and patterns may vary slightly from the image shown.

FINISHES

AGED BRASS



DIMENSIONS / SPECS

Height: 66"
Width/Diameter: 66"
Length: 66"
Minimum Height: 66"
Maximum Height: 66"
Canopy/Backplate: 4.75"
Hanging Type: 108" Premium Composite Cord
Product Weight: 66lb
Extension: 66"
Top to Center: 66"
Canopy/Backplate Shape: Round
Sloped Ceiling Compatible: No
Living Finish: Yes
Uplight Only: Yes
Min Extension: 66"
Max Extension: 66"

Shade 1: Natural Woven
Shade 1 Finish: Natural Grasscloth
Shade 1 Top Width: 3.5"
Shade 1 Bottom L/W: 0" / 6.75"
Shade 1 Height: 6.5"

ELECTRICAL

Bulb 1
Bulb Included: No
Socket: E26 Medium Base
Bulb Type: A19
Max Wattage: 15
Bulb Quantity: 1
Wire Length: 500mm
Cord Type: ! New Cord Type
Dimmer Type: Incandescent
Switch Type: ON/OFF STOMP SWITCH
Gem Box Required (2"x3"): Yes
Dark Sky: Yes
Convertible: No
CRI: 66
Color Temp.: 66k
Lumens: 66
Title 24: Yes
Field Serviceable: No
Voltage: 120

Voltage: 120
Gem Box: Required

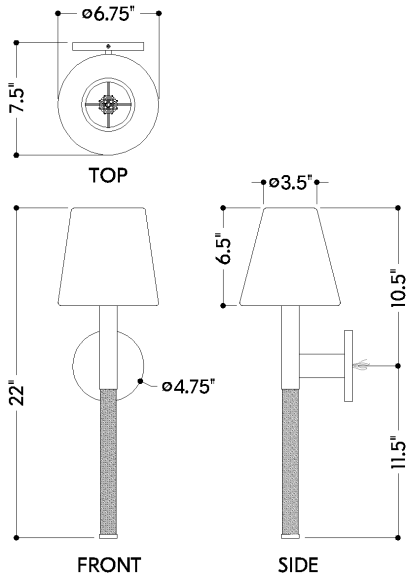

LINDENWOOD

3420-AGB

HUDSON VALLEY LIGHTING

Battery

Battery Powered: Yes
Battery Included: Yes
Battery Life: ! New Battery Life !

SHIPPING

Carton 1: 20" x 13" x 11"
Carton 1 Weight: 7lb
Shipping Method: Ground
Country of Origin: VN