MONTROSE

3151-VGL/SSD

HUDSON VALLEY LIGHTING

Inspired by calla lilies in bloom, Montrose evokes a sense of modern Romanticism. Combining Art Deco aesthetics with clean lines, the slender stems and trumpet-shaped shades extend gracefully to the sky. A soft, soothing glow emanates from the sandy-hued botanical forms. Montrose is available as a wall sconce or chandelier in two sizes.

FINISHES

VINTAGE GOLD LEAF

DIMENSIONS / SPECS

Height: 66"
Width/Diameter: 66"
Length: 66"
Minimum Height: 66"
Maximum Height: 66"
Canopy/Backplate: 4.5"
Hanging Type: 108" Premium Composite Cord
Product Weight: 66lb
Extension: 66"
Top to Center: 66"
Canopy/Backplate Shape: Round
Sloped Ceiling Compatible: No
Living Finish: Yes
Uplight Only: Yes
Min Extension: 66"
Max Extension: 66"



ELECTRICAL

Bulb 1
Bulb Included: No
Socket: E12 Candelabra Base
Bulb Type: G16.5
Max Wattage: 8
Bulb Quantity: 1
Wire Length: 500mm
Cord Type: ! New Cord Type
Dimmer Type: Incandescent
Switch Type: ON/OFF STOMP SWITCH
Gem Box Required (2"x3"): Yes
Dark Sky: Yes
Convertible: No
CRI: 66
Color Temp.: 66k
Lumens: 66
Title 24: Yes
Field Serviceable: No
Voltage: 120 VAC

Voltage: 120 VAC
Gem Box: Required

Battery
Battery Powered: Yes
Battery Included: Yes
Battery Life: ! New Battery Life !

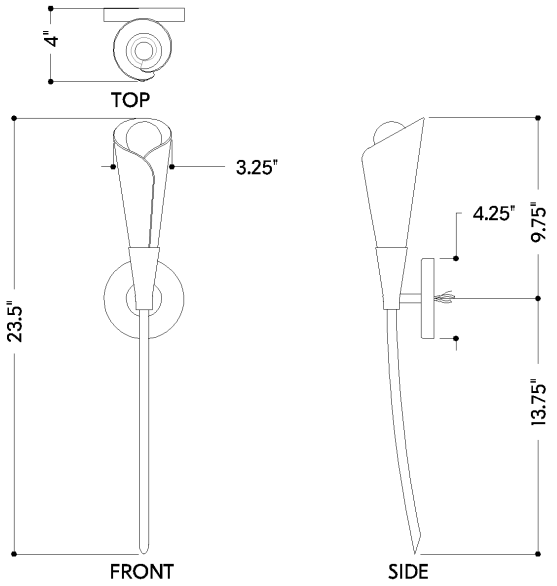

MONTROSE

3151-VGL/SSD

HUDSON VALLEY LIGHTING

SHIPPING

Carton 1: 28" x 7" x 6"
Carton 1 Weight: 8lb
Shipping Method: Ground
Country of Origin: PH