SCRANTON

3015-OB

HUDSON VALLEY LIGHTING

Inspired by the shape of an apple, Scranton features a softly defined outer layer of etched glass and a narrow 'core' of shiny opal glass within. The freshness of the organic silhouette, paired with the sleek glass layers and metal accents, makes it perfect for a dining room or kitchen. Scranton is available in two sizes and two finishes, Aged Brass and Old Bronze.

FINISHES

OLD BRONZE

DIMENSIONS / SPECS

Height: 66"
Width/Diameter: 66"
Length: 66"
Minimum Height: 66"
Maximum Height: 66"
Canopy/Backplate: 6"
Hanging Type: 108" Premium Composite Cord
Product Weight: 66lb
Extension: 66"
Top to Center: 66"
Canopy/Backplate Shape: Round
Sloped Ceiling Compatible: No
Living Finish: Yes
Uplight Only: Yes
Min Extension: 66"
Max Extension: 66"

Shade 1: Glass
Shade 1 Finish: Clear Etched
Shade 1 Top Width: 15"
Shade 1 Height: 13.25"
Shade 2: Glass
Shade 2 Finish: Opal Glossy
Shade 2 Top Width: 3.75"
Shade 2 Height: 12"

ELECTRICAL

Bulb 1
Bulb Included: N/A
Socket: Integrated LED
Max Wattage: 20
Bulb Quantity: 1
Wire Length: 500mm
Cord Type: ! New Cord Type
Dimmer Type: Incandescent
Switch Type: ON/OFF STOMP SWITCH
Gem Box Required (2"x3"): Yes
Dark Sky: Yes
Convertible: No
CRI: 66
Color Temp.: 66k
Lumens: 66
Title 24: Yes
Field Serviceable: No
Voltage: 120

Voltage: 120



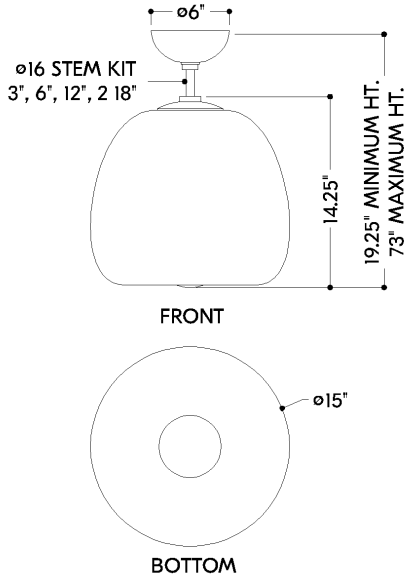

SCRANTON

3015-OB

HUDSON VALLEY LIGHTING

Battery

Battery Powered: Yes
Battery Included: Yes
Battery Life: ! New Battery Life !

SHIPPING

Carton 1: 24" x 24" x 28"
Carton 1 Weight: 19lb
Shipping Method: Ground
Country of Origin: VN