ALBURGH

2925-VGL

HUDSON VALLEY LIGHTING

Maritime meets modern style in the Alburgh sconce. The clean single-light design features an elongated silhouette accented by a nautical square knot in the center and loop details at the top and bottom. The crisp white linen shade carries through the timeless, tailored look. Alburgh is available in luxurious Vintage Gold Leaf or a more rustic Aged Iron finish.

FINISHES

VINTAGE GOLD LEAF

DIMENSIONS / SPECS

Height: 66"
Width/Diameter: 66"
Length: 66"
Minimum Height: 66"
Maximum Height: 66"
Canopy/Backplate: 4.75"
Hanging Type: 108" Premium Composite Cord
Product Weight: 66lb
Extension: 66"
Top to Center: 66"
Canopy/Backplate Shape: Round
Sloped Ceiling Compatible: No
Living Finish: Yes
Uplight Only: Yes
Min Extension: 66"
Max Extension: 66"

Shade 1: Linen
Shade 1 Finish: White
Shade 1 Top Length: 2.5"
Shade 1 Top Width: 3.5"
Shade 1 Bottom L/W: 5" / 6.75"
Shade 1 Height: 7"



ELECTRICAL

Bulb 1
Bulb Included: No
Socket: E12 Candelabra Base
Bulb Type: B11
Max Wattage: 8
Bulb Quantity: 1
Wire Length: 500mm
Cord Type: ! New Cord Type
Dimmer Type: Incandescent
Switch Type: ON/OFF STOMP SWITCH
Gem Box Required (2"x3"): Yes
Dark Sky: Yes
Convertible: No
CRI: 66
Color Temp.: 66k
Lumens: 66
Title 24: Yes
Field Serviceable: No
Voltage: 120

Voltage: 120
Gem Box: Required

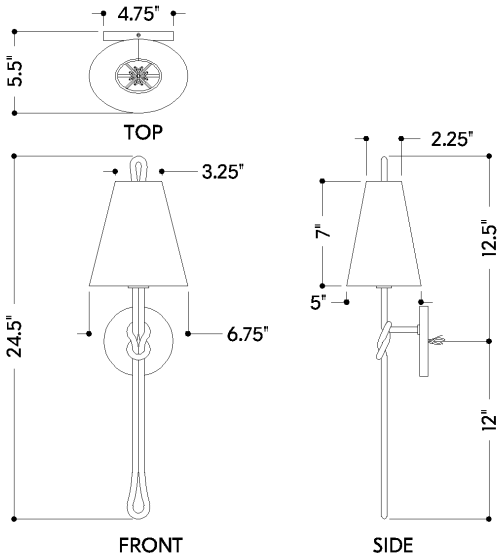

ALBURGH

2925-VGL

HUDSON VALLEY LIGHTING

Battery

Battery Powered: Yes
Battery Included: Yes
Battery Life: ! New Battery Life !

SHIPPING

Carton 1: 22" x 11" x 8"
Carton 1 Weight: 5lb
Shipping Method: Ground
Country of Origin: PH