WILLIAMS

2625-AGB

HUDSON VALLEY LIGHTING

Old meets new in the nostalgic Williams pendant. Streamlined renditions of classic glass techniques are stacked to create a striking totemic composition. Alternating clear optic and smoked glass shades are stacked around a single LED tube, which serves as the core of this eye-catching fixture. Williams is available in two sizes and is finished in Aged Brass.

FINISHES

AGED BRASS

DIMENSIONS / SPECS

Height: 66"
Width/Diameter: 66"
Length: 66"
Minimum Height: 66"
Maximum Height: 66"
Canopy/Backplate: 5.5"
Hanging Type: 108" Premium Composite Cord
Product Weight: 66lb
Extension: 66"
Top to Center: 66"
Canopy/Backplate Shape: Round
Sloped Ceiling Compatible: No
Living Finish: Yes
Uplight Only: Yes
Min Extension: 66"
Max Extension: 66"

Shade 1: Glass
Shade 1 Finish: Clear Optic
Shade 1 Top Width: 5"
Shade 1 Height: 4.75"
Shade 2: Glass
Shade 2 Finish: Clear Smoke
Shade 2 Top Width: 12.5"
Shade 2 Height: 4.25"

ELECTRICAL

Bulb 1
Bulb Included: N/A
Socket: Integrated LED
Max Wattage: 29
Bulb Quantity: 1
Wire Length: 500mm
Cord Type: ! New Cord Type
Dimmer Type: Incandescent
Switch Type: ON/OFF STOMP SWITCH
Gem Box Required (2"x3"): Yes
Dark Sky: Yes
Convertible: No
CRI: 66
Color Temp.: 66k
Lumens: 66
Title 24: Yes
Field Serviceable: No
Voltage: 120V TO 277V

Voltage: 120V TO 277V



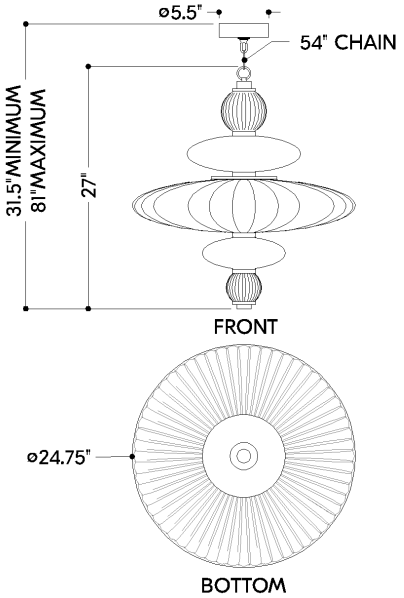

WILLIAMS

2625-AGB

HUDSON VALLEY LIGHTING

Battery

Battery Powered: Yes
Battery Included: Yes
Battery Life: ! New Battery Life !

SHIPPING

Carton 1: 28" x 28" x 17"
Carton 1 Weight: 37lb
Shipping Method: Ground
Country of Origin: VN