KNIGHTON

2602-AGB

HUDSON VALLEY LIGHTING

Designed to provide ambient lighting in a bath area, Knighton features a slender glass rod design with integrated LED. The faceted, clear extruded glass creates a layered effect, adding texture while creating a soft diffusion of light. The minimal Aged Brass metalwork is positioned both inside and outside the glass, heightening the dimensionality of this upscale sconce.

FINISHES

AGED BRASS



DIMENSIONS / SPECS

Height: 66"
Width/Diameter: 66"
Length: 66"
Minimum Height: 66"
Maximum Height: 66"
Canopy/Backplate: 4.75"
Hanging Type: 108" Premium Composite Cord
Product Weight: 66lb
Extension: 66"
Top to Center: 66"
Canopy/Backplate Shape: Round
Sloped Ceiling Compatible: No
Living Finish: Yes
Uplight Only: Yes
Min Extension: 66"
Max Extension: 66"

Shade 1: Glass
Shade 1 Finish: Clear
Shade 1 Top Width: 1.25"
Shade 1 Height: 13.5"

ELECTRICAL

Bulb 1
Bulb Included: N/A
Socket: Integrated LED
Max Wattage: 6
Bulb Quantity: 2
Wire Length: 500mm
Cord Type: ! New Cord Type
Dimmer Type: Incandescent
Switch Type: ON/OFF STOMP SWITCH
Gem Box Required (2"x3"): Yes
Dark Sky: Yes
Convertible: No
CRI: 66
Color Temp.: 66k
Lumens: 66
Title 24: Yes
Field Serviceable: No
Voltage: 120

Voltage: 120

Battery
Battery Powered: Yes
Battery Included: Yes
Battery Life: ! New Battery Life !

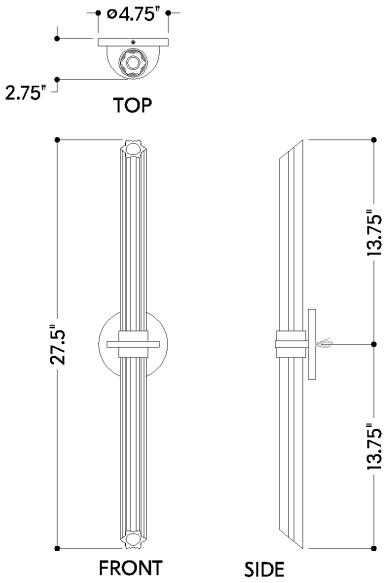

KNIGHTON

2602-AGB

HUDSON VALLEY LIGHTING

SHIPPING

Carton 1: 18" x 13" x 6"
Carton 1 Weight: 6lb
Shipping Method: Ground
Country of Origin: VN