OTSEGO

2402-AGB

HUDSON VALLEY LIGHTING

An ode to the gentle curves of the Art Nouveau period, Otsego features two large opal glossy bulbs in an hourglass formation. This double wall light produces an atmospheric glow, bringing a welcoming ambiance to any space. Choose from two finishes Aged Brass for a vintage feel, or Polished Nickel for a sleek, modern style.

FINISHES

AGED BRASS

DIMENSIONS / SPECS

Height: 66"
Width/Diameter: 66"
Length: 66"
Minimum Height: 66"
Maximum Height: 66"
Canopy/Backplate: 4.75"
Hanging Type: 108" Premium Composite Cord
Product Weight: 66lb
Extension: 66"
Top to Center: 66"
Canopy/Backplate Shape: Round
Sloped Ceiling Compatible: No
Living Finish: Yes
Uplight Only: Yes
Min Extension: 66"
Max Extension: 66"

Shade 1: Glass
Shade 1 Finish: Opal Shiny
Shade 1 Top Width: 7.5"
Shade 1 Height: 5.75"



ELECTRICAL

Bulb 1
Bulb Included: No
Socket: E12 Candelabra Base
Bulb Type: G16.5
Max Wattage: 8
Bulb Quantity: 2
Wire Length: 500mm
Cord Type: ! New Cord Type
Dimmer Type: Incandescent
Switch Type: ON/OFF STOMP SWITCH
Gem Box Required (2"x3"): Yes
Dark Sky: Yes
Convertible: No
CRI: 66
Color Temp.: 66k
Lumens: 66
Title 24: Yes
Field Serviceable: No
Voltage: 120 VAC

Voltage: 120 VAC
Gem Box: Required

Battery
Battery Powered: Yes
Battery Included: Yes
Battery Life: ! New Battery Life !

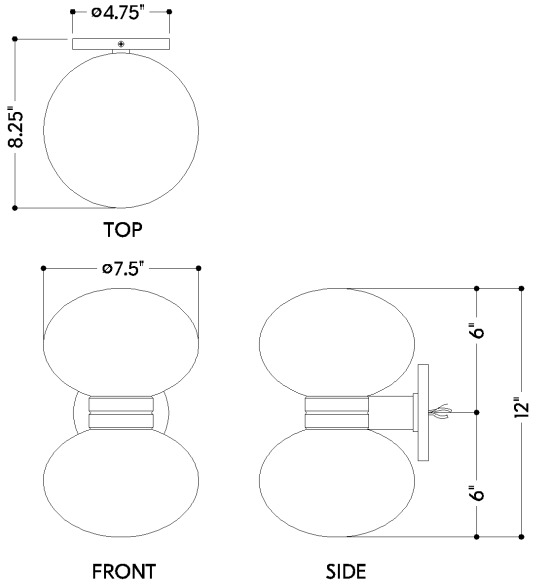

OTSEGO

2402-AGB

HUDSON VALLEY LIGHTING

SHIPPING

Carton 1: 21" x 12" x 11"
Carton 1 Weight: 6lb
Shipping Method: Ground
Country of Origin: VN