FERNDALE

2236-GSW

HUDSON VALLEY LIGHTING

Entirely handcrafted from white coiled cotton cord, the Fishkill pendant is a pure expression of materiality. The small gaps between the coils allow light to escape, creating a warm, glowing effect that fills the entire shade. Available in two sizes, Ferndale lends a fresh, airy quality to contemporary spaces.

*Due to the one-of-a-kind nature of the medium, exact colors and patterns may vary slightly from the image shown.

FINISHES

GESSO WHITE

DIMENSIONS / SPECS

Height: 66"
Width/Diameter: 66"
Length: 66"
Minimum Height: 66"
Maximum Height: 66"
Canopy/Backplate: 6.25"
Hanging Type: 108" Premium Composite Cord
Product Weight: 66lb
Extension: 66"
Top to Center: 66"
Canopy/Backplate Shape: Round
Sloped Ceiling Compatible: No
Living Finish: Yes
Uplight Only: Yes
Min Extension: 66"
Max Extension: 66"

Shade 1: String
Shade 1 Top Width: 36"
Shade 1 Height: 17.75"

ELECTRICAL

Bulb 1
Bulb Included: No
Socket: E26 Medium Base
Bulb Type: A21
Max Wattage: 25
Bulb Quantity: 1
Wire Length: 500mm
Cord Type: ! New Cord Type
Dimmer Type: Incandescent
Switch Type: ON/OFF STOMP SWITCH
Gem Box Required (2"x3"): Yes
Dark Sky: Yes
Convertible: No
CRI: 66
Color Temp.: 66k
Lumens: 66
Title 24: Yes
Field Serviceable: No
Voltage: 120

Voltage: 120

Battery
Battery Powered: Yes
Battery Included: Yes
Battery Life: ! New Battery Life !



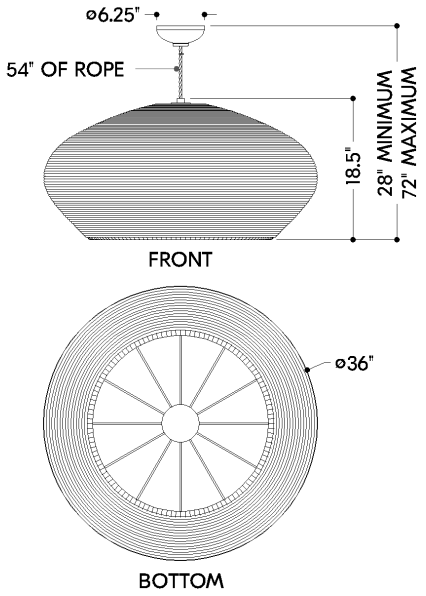

FERNDALE

2236-GSW

HUDSON VALLEY LIGHTING

SHIPPING

Carton 1: 40" x 40" x 23"
Carton 1 Weight: 11lb
Shipping Method: Truck Only
Country of Origin: VN