KEUKA PARK

2018-OB

HUDSON VALLEY LIGHTING

The earring-like design of Keuka Park exudes ornamental, graphic appeal. A thick disc of Blonchino Piastre glass is illuminated at the poin where it attaches to the racetrack frame of this striking wall fixture. Whether finished in Aged Brass or Old Bronze, Keuka Park brings modernist artistry to any wall.

FINISHES

OLD BRONZE



DIMENSIONS / SPECS

Height: 66"
Width/Diameter: 66"
Length: 66"
Minimum Height: 66"
Maximum Height: 66"
Canopy/Backplate: 4.75"
Hanging Type: 108" Premium Composite Cord
Product Weight: 66lb
Extension: 66"
Top to Center: 66"
Canopy/Backplate Shape: Round
Sloped Ceiling Compatible: No
Living Finish: Yes
Uplight Only: Yes
Min Extension: 66"
Max Extension: 66"

Shade 1: Cast Glass
Shade 1 Finish: Blonchino Piastra
Shade 1 Top Width: 10"
Shade 1 Height: 0.5"

ELECTRICAL

Bulb 1
Bulb Included: N/A
Socket: Integrated LED
Max Wattage: 7
Bulb Quantity: 1
Wire Length: 500mm
Cord Type: ! New Cord Type
Dimmer Type: Incandescent
Switch Type: ON/OFF STOMP SWITCH
Gem Box Required (2"x3"): Yes
Dark Sky: Yes
Convertible: No
CRI: 66
Color Temp.: 66k
Lumens: 66
Title 24: Yes
Field Serviceable: No
Voltage: 120

Voltage: 120
Gem Box: Required

Battery
Battery Powered: Yes
Battery Included: Yes
Battery Life: ! New Battery Life !

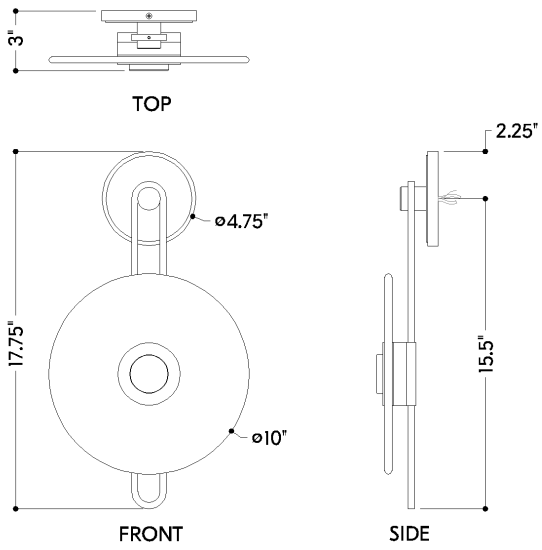

KEUKA PARK

2018-OB

HUDSON VALLEY LIGHTING

SHIPPING

Carton 1: 22" x 20" x 7"
Carton 1 Weight: 9lb
Shipping Method: Ground
Country of Origin: VN