ROCHFORD

2008-PN

HUDSON VALLEY LIGHTING

This celestial-inspired sconce features a single large orb suspended on a sleek backplate. The lower half of the fixture is finished in either Aged Brass or Polished Nickel, while the upper half is made from bubbled sprite glass. Powered by energy-efficient LED, Rochford illuminates large areas with an effervescent glow.

*Due to the one-of-a-kind nature of the medium, exact colors and patterns may vary slightly from the image shown.

FINISHES

POLISHED NICKEL

DIMENSIONS / SPECS

Height: 66"
Width/Diameter: 66"
Length: 66"
Minimum Height: 66"
Maximum Height: 66"
Canopy/Backplate: 5"
Hanging Type: 108" Premium Composite Cord
Product Weight: 66lb
Extension: 66"
Top to Center: 66"
Canopy/Backplate Shape: Square
Sloped Ceiling Compatible: No
Living Finish: Yes
Uplight Only: Yes
Min Extension: 66"
Max Extension: 66"

Shade 1: Seeded Glass
Shade 1 Finish: Clear Etched
Shade 1 Top Width: 6"
Shade 1 Height: 4.5"



ELECTRICAL

Bulb 1
Bulb Included: N/A
Socket: Integrated LED
Max Wattage: 5
Bulb Quantity: 1
Wire Length: 500mm
Cord Type: ! New Cord Type
Dimmer Type: Incandescent
Switch Type: ON/OFF STOMP SWITCH
Gem Box Required (2"x3"): Yes
Dark Sky: Yes
Convertible: No
CRI: 66
Color Temp.: 66k
Lumens: 66
Title 24: Yes
Field Serviceable: No
Voltage: 120V

Voltage: 120V
Gem Box: Required

Battery
Battery Powered: Yes
Battery Included: Yes
Battery Life: ! New Battery Life !

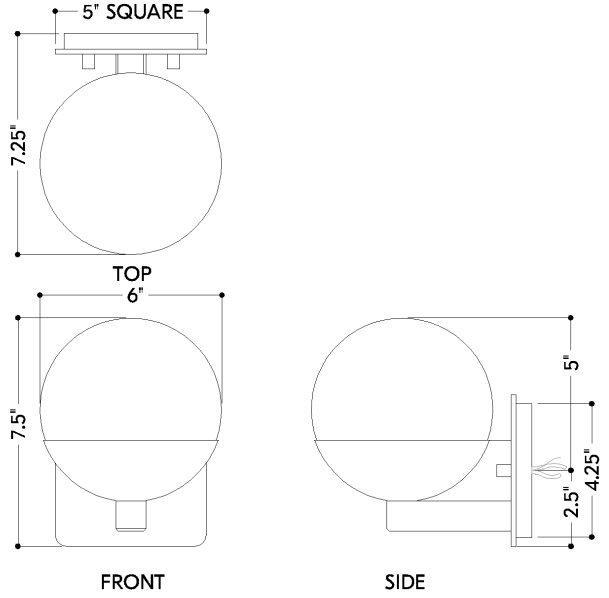

ROCHFORD

2008-PN

HUDSON VALLEY LIGHTING

SHIPPING

Carton 1: 17" x 11" x 11"
Carton 1 Weight: 7lb
Shipping Method: Ground
Country of Origin: VN