POTTERSVILLE

1918-DB/CIC

HUDSON VALLEY LIGHTING

Taking cues from mid-century fixtures, the forms of the Pottersville family are kept intentionally simple to serve as canvases for the dynamic glaze techniques of highly skilled Vietnamese potters. The graphic yet subdued glazes impart a highly artisanal feel, bringing artistry into a kitchen, hallway, or bedroom. Pottersville is available as a pendant in two sizes and a 1-light wall sconce.

*Due to the one-of-a-kind nature of the medium, exact colors and patterns may vary slightly from the image shown.

FINISHES

DISTRESSED BRONZE w/ CERAMIC IVORY CRACKLE

DIMENSIONS / SPECS

Height: 66"
Width/Diameter: 66"
Length: 66"
Minimum Height: 66"
Maximum Height: 66"
Canopy/Backplate: 5.5"
Hanging Type: 108" Premium Composite Cord
Product Weight: 66lb
Extension: 66"
Top to Center: 66"
Canopy/Backplate Shape: Round
Sloped Ceiling Compatible: No
Living Finish: Yes
Uplight Only: Yes
Min Extension: 66"
Max Extension: 66"

Shade 1: Ceramic
Shade 1 Top Width: 3.5"
Shade 1 Bottom L/W: 0" / 18"
Shade 1 Height: 11.25"

ELECTRICAL

Bulb 1
Bulb Included: No
Socket: E26 Medium Base
Bulb Type: G25
Max Wattage: 15
Bulb Quantity: 1
Wire Length: 500mm
Cord Type: ! New Cord Type
Dimmer Type: Incandescent
Switch Type: ON/OFF STOMP SWITCH
Gem Box Required (2"x3"): Yes
Dark Sky: Yes
Convertible: No
CRI: 66
Color Temp.: 66k
Lumens: 66
Title 24: Yes
Field Serviceable: No
Voltage: 120

Voltage: 120



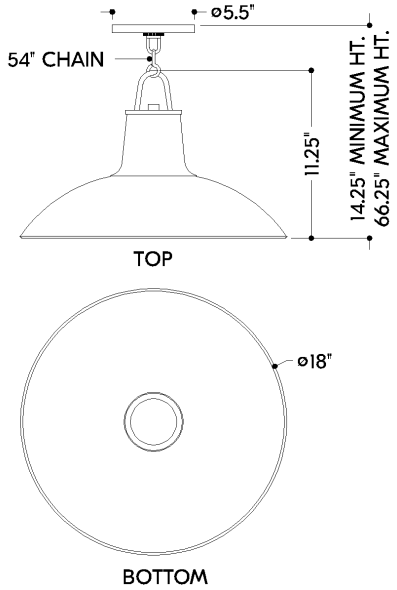

POTTERSVILLE

1918-DB/CIC

HUDSON VALLEY LIGHTING

Battery

Battery Powered: Yes
Battery Included: Yes
Battery Life: ! New Battery Life !

SHIPPING

Carton 1: 21" x 21" x 14"
Carton 1 Weight: 18lb
Shipping Method: Ground
Country of Origin: VN