QUEBEC

1634-GL

HUDSON VALLEY LIGHTING

In a clever play on materiality, this sensory fixture transforms bleached Abaca rope into jewelry-like chains. The finely twisted ropes appear like delicate gold strands from afar but have a rustic quality that makes the fixture feel casual and coastal. Suspended by a thick Gold Leaf framework, Quebec is available in two sizes of chandelier as well as a sconce. The clear glass drum has been painted white for a soft, opaque effect that gently diffuses light.

*Due to the one-of-a-kind nature of the medium, exact colors and patterns may vary slightly from the image shown.

FINISHES

GOLD LEAF

DIMENSIONS / SPECS

Height: 66"
Width/Diameter: 66"
Length: 66"
Minimum Height: 66"
Maximum Height: 66"
Canopy/Backplate: 6"
Hanging Type: 108" Premium Composite Cord
Product Weight: 66lb
Extension: 66"
Top to Center: 66"
Canopy/Backplate Shape: Round
Sloped Ceiling Compatible: No
Living Finish: Yes
Uplight Only: Yes
Min Extension: 66"
Max Extension: 66"

Shade 1: Abaca
Shade 1 Finish: Bleached
Shade 1 Top Width: 20.5"
Shade 1 Bottom L/W: 0" / 20.5"
Shade 1 Height: 5"

ELECTRICAL

Bulb 1
Bulb Included: No
Socket: E12 Candelabra Base
Bulb Type: B11
Max Wattage: 8
Bulb Quantity: 4
Wire Length: 500mm
Cord Type: ! New Cord Type
Dimmer Type: Incandescent
Switch Type: ON/OFF STOMP SWITCH
Gem Box Required (2"x3"): Yes
Dark Sky: Yes
Convertible: No
CRI: 66
Color Temp.: 66k
Lumens: 66
Title 24: Yes
Field Serviceable: No
Voltage: 120 VAC

Voltage: 120 VAC



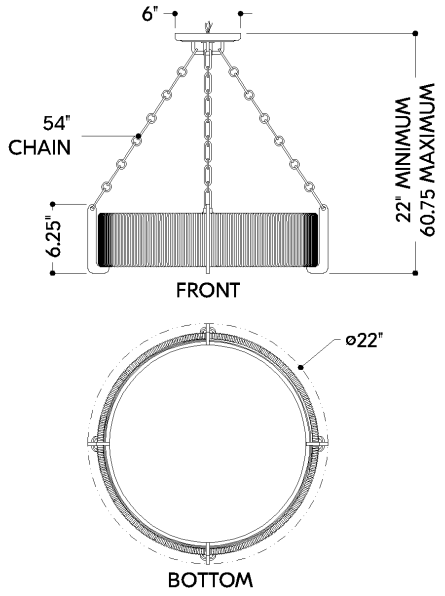

QUEBEC

1634-GL

HUDSON VALLEY LIGHTING

Battery

Battery Powered: Yes
Battery Included: Yes
Battery Life: ! New Battery Life !

SHIPPING

Carton 1: 26" x 26" x 12"
Carton 1 Weight: 62lb
Shipping Method: Ground
Country of Origin: PH