VERBANK

1618-VGL

HUDSON VALLEY LIGHTING

A delicate Vintage Gold Leaf cage, gracefully swirling cloud glass orb and intricate suspension chains converge to create this mesmerizing pendant light. Exhibiting a jewelry-like appearance, Verbank is enhanced by its subtle details, including circular ornaments on the chains and Art Deco-inspired curves. Like a planetary body glowing in the sky, this is a truly magical lighting experience.

FINISHES

VINTAGE GOLD LEAF

DIMENSIONS / SPECS

Height: 66"
Width/Diameter: 66"
Length: 66"
Minimum Height: 66"
Maximum Height: 66"
Canopy/Backplate: 7"
Hanging Type: 108" Premium Composite Cord
Product Weight: 66lb
Extension: 66"
Top to Center: 66"
Canopy/Backplate Shape: Round
Sloped Ceiling Compatible: No
Living Finish: Yes
Uplight Only: Yes
Min Extension: 66"
Max Extension: 66"

Shade 1: Glass
Shade 1 Finish: Cloud Etched
Shade 1 Top Width: 14"

ELECTRICAL

Bulb 1
Bulb Included: No
Socket: E26 Medium Base
Bulb Type: G40
Max Wattage: 25
Bulb Quantity: 1
Wire Length: 500mm
Cord Type: ! New Cord Type
Dimmer Type: Incandescent
Switch Type: ON/OFF STOMP SWITCH
Gem Box Required (2"x3"): Yes
Dark Sky: Yes
Convertible: No
CRI: 66
Color Temp.: 66k
Lumens: 66
Title 24: Yes
Field Serviceable: No
Voltage: 120

Voltage: 120

Battery
Battery Powered: Yes
Battery Included: Yes
Battery Life: ! New Battery Life !



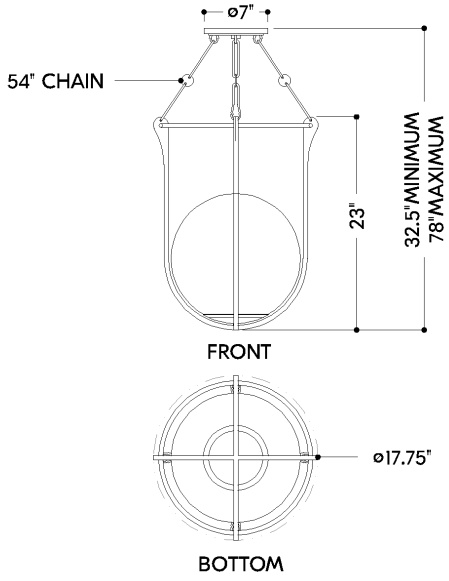

VERBANK

1618-VGL

HUDSON VALLEY LIGHTING

SHIPPING

Carton 1: 42" x 22" x 22"
Carton 1 Weight: 29lb
Shipping Method: Ground
Country of Origin: PH