# GILL

1344-AGB

HUDSON VALLEY LIGHTING

A classic lantern receives a contemporary update in the form of Gill. The central candle cluster and Aged Brass framework feel historical, while the bubble-like shade points toward the future. A champagne swirl glass technique has been applied to the sphere, adding to the dynamic energy of this pendant. Gill is available with 3 or 4 lights.

## FINISHES

AGED BRASS

## DIMENSIONS / SPECS

Height: 66"
Width/Diameter: 66"
Length: 66"
Minimum Height: 66"
Maximum Height: 66"
Canopy/Backplate: 4"
Hanging Type: 108" Premium Composite Cord
Product Weight: 66lb
Extension: 66"
Top to Center: 66"
Canopy/Backplate Shape: Round
Sloped Ceiling Compatible: No
Living Finish: Yes
Uplight Only: Yes
Min Extension: 66"
Max Extension: 66"

Shade 1: Glass
Shade 1 Finish: Champagne Swirl
Shade 1 Top Width: 19.5"
Shade 1 Height: 16.75"

## ELECTRICAL

Bulb 1
Bulb Included: No
Socket: E12 Candelabra Base
Bulb Type: G16.5
Max Wattage: 8
Bulb Quantity: 4
Wire Length: 500mm
Cord Type: ! New Cord Type
Dimmer Type: Incandescent
Switch Type: ON/OFF STOMP SWITCH
Gem Box Required (2"x3"): Yes
Dark Sky: Yes
Convertible: No
CRI: 66
Color Temp.: 66k
Lumens: 66
Title 24: Yes
Field Serviceable: No
Voltage: 120

Voltage: 120

Battery
Battery Powered: Yes
Battery Included: Yes
Battery Life: ! New Battery Life !



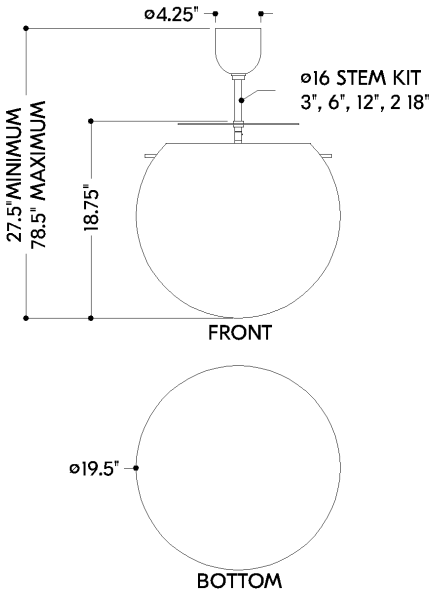

# GILL
1344-AGB

HUDSON VALLEY LIGHTING

## SHIPPING

Carton 1: 24" x 24" x 21"
Carton 1 Weight: 26lb
Shipping Method: Ground
Country of Origin: VN