BAXFORD

1314-AGB

HUDSON VALLEY LIGHTING

A single piece of folded piastre glass forms the ethereal silhouette of the Baxford sconce. Etched on the inside, the glass softens the light diffusion. The refined framework provides a glimmer of Aged Brass through the glass, adding structure and warmth.

FINISHES

AGED BRASS

DIMENSIONS / SPECS

Height: 66"
Width/Diameter: 66"
Length: 66"
Minimum Height: 66"
Maximum Height: 66"
Canopy/Backplate: 5.5"
Hanging Type: 108" Premium Composite Cord
Product Weight: 66lb
Extension: 66"
Top to Center: 66"
Canopy/Backplate Shape: Rectangle
Sloped Ceiling Compatible: No
Living Finish: Yes
Uplight Only: Yes
Min Extension: 66"
Max Extension: 66"

Shade 1: Cast Glass
Shade 1 Finish: Piastra
Shade 1 Top Length: 3.5"
Shade 1 Top Width: 8"
Shade 1 Bottom L/W: 2.5" / 6"
Shade 1 Height: 14"



ELECTRICAL

Bulb 1
Bulb Included: No
Socket: E26 Medium Base
Bulb Type: T10-9
Max Wattage: 15
Bulb Quantity: 1
Wire Length: 500mm
Cord Type: ! New Cord Type
Dimmer Type: Incandescent
Switch Type: ON/OFF STOMP SWITCH
Gem Box Required (2"x3"): Yes
Dark Sky: Yes
Convertible: No
CRI: 66
Color Temp.: 66k
Lumens: 66
Title 24: Yes
Field Serviceable: No
Voltage: 120

Voltage: 120
Gem Box: Required

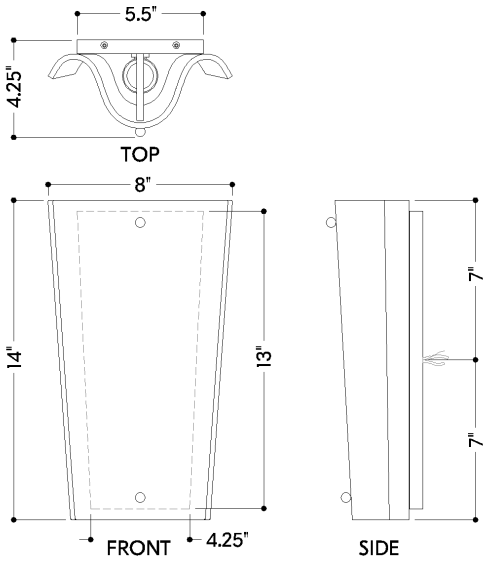

Battery
Battery Powered: Yes
Battery Included: Yes
Battery Life: ! New Battery Life !

BAXFORD

1314-AGB

HUDSON VALLEY LIGHTING

SHIPPING

Carton 1: 17" x 11" x 8"
Carton 1 Weight: 8lb
Shipping Method: Ground
Country of Origin: VN