ONEIDA

1271-VGL/SSD

HUDSON VALLEY LIGHTING

Exhibiting graceful symmetry, Oneida revives Art Deco principles with contemporary simplicity. Artfully layered tiers of Vintage Gold Leaf and sand-hued plates create a streamlined vision that guides the direction of light. As either a pendant light or sconce, the understated elegance of Oneida shines through.

FINISHES

VINTAGE GOLD LEAF

DIMENSIONS / SPECS

Height: 66"
Width/Diameter: 66"
Length: 66"
Minimum Height: 66"
Maximum Height: 66"
Canopy/Backplate: 4.75"
Hanging Type: 108" Premium Composite Cord
Product Weight: 66lb
Extension: 66"
Top to Center: 66"
Canopy/Backplate Shape: Round
Sloped Ceiling Compatible: No
Living Finish: Yes
Uplight Only: Yes
Min Extension: 66"
Max Extension: 66"



ELECTRICAL

Bulb 1
Bulb Included: No
Socket: E12 Candelabra Base
Bulb Type: G16.5
Max Wattage: 8
Bulb Quantity: 2
Wire Length: 500mm
Cord Type: ! New Cord Type
Dimmer Type: Incandescent
Switch Type: ON/OFF STOMP SWITCH
Gem Box Required (2"x3"): Yes
Dark Sky: Yes
Convertible: No
CRI: 66
Color Temp.: 66k
Lumens: 66
Title 24: Yes
Field Serviceable: No
Voltage: 120 VAC

Voltage: 120 VAC
Gem Box: Required

Battery
Battery Powered: Yes
Battery Included: Yes
Battery Life: ! New Battery Life !

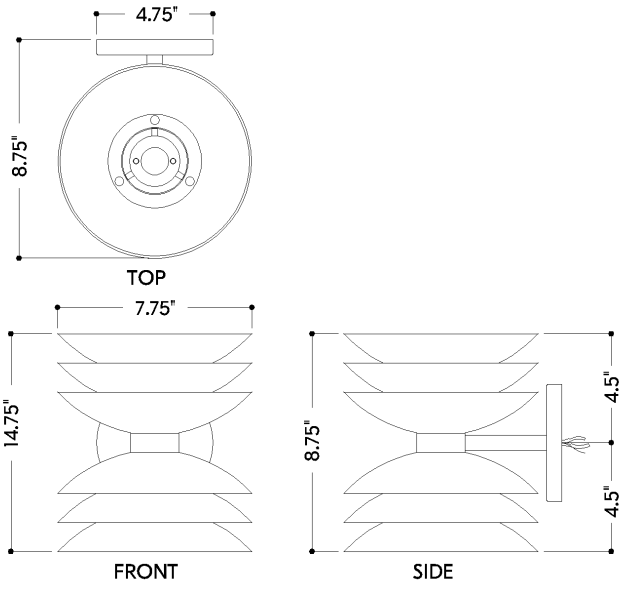

ONEIDA

1271-VGL/SSD

HUDSON VALLEY LIGHTING

SHIPPING

Carton 1: 13" x 13" x 12"
Carton 1 Weight: 15lb
Shipping Method: Ground
Country of Origin: PH