LEWISTON

1208-WP

HUDSON VALLEY LIGHTING

Intricately wrapped in white coconut shell beads, the enchanting Lewiston resembles an artifact pulled from the sea. Its gracefully looped arms form an oblong cage-like structure with a candle cluster nested inside. Suspended from a matching white chain, Lewiston is available in 6 and 8-light versions.

*Due to the one-of-a-kind nature of the medium, exact colors and patterns may vary slightly from the image shown.

FINISHES

WHITE PLASTER

DIMENSIONS / SPECS

Height: 66"
Width/Diameter: 66"
Length: 66"
Minimum Height: 66"
Maximum Height: 66"
Canopy/Backplate: 6.5"
Hanging Type: 108" Premium Composite Cord
Product Weight: 66lb
Extension: 66"
Top to Center: 66"
Canopy/Backplate Shape: Round
Sloped Ceiling Compatible: No
Living Finish: Yes
Uplight Only: Yes
Min Extension: 66"
Max Extension: 66"

Shade 1: Coco Beads
Shade 1 Finish: Bleached



ELECTRICAL

Bulb 1
Bulb Included: No
Socket: E12 Candelabra Base
Bulb Type: T8-3.5
Max Wattage: 8
Bulb Quantity: 8
Wire Length: 500mm
Cord Type: ! New Cord Type
Dimmer Type: Incandescent
Switch Type: ON/OFF STOMP SWITCH
Gem Box Required (2"x3"): Yes
Dark Sky: Yes
Convertible: No
CRI: 66
Color Temp.: 66k
Lumens: 66
Title 24: Yes
Field Serviceable: No
Voltage: 120

Voltage: 120

Battery
Battery Powered: Yes
Battery Included: Yes
Battery Life: ! New Battery Life !

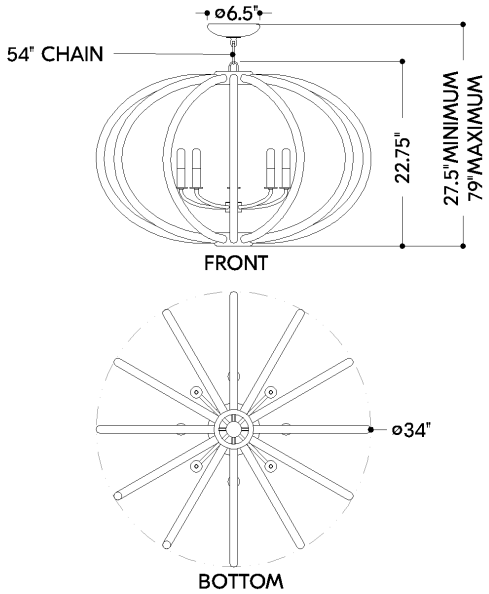

LEWISTON

1208-WP

HUDSON VALLEY LIGHTING

SHIPPING

Carton 1: 38" x 38" x 28"
Carton 1 Weight: 59lb
Shipping Method: Truck Only
Country of Origin: PH