TOTTENVILLE

1127-PN

HUDSON VALLEY LIGHTING

Pairing minimalist metalwork with matte cloud glass, Tottenville is a highly versatile sconce for a powder room or bath area. The glass shades feature a unique triangular profile that gives this fixture both slimness and its distinctly modern feel. Choose from a single or dual light sconce with an Aged Brass or Polished Nickel finish.

FINISHES

POLISHED NICKEL

DIMENSIONS / SPECS

Height: 66"
Width/Diameter: 66"
Length: 66"
Minimum Height: 66"
Maximum Height: 66"
Canopy/Backplate: 4.25"
Hanging Type: 108" Premium Composite Cord
Product Weight: 66lb
Extension: 66"
Top to Center: 66"
Canopy/Backplate Shape: Rectangle
Sloped Ceiling Compatible: No
Living Finish: Yes
Uplight Only: Yes
Min Extension: 66"
Max Extension: 66"

Shade 1: Glass
Shade 1 Finish: Matte Cloud
Shade 1 Top Length: 3"
Shade 1 Top Width: 2.75"
Shade 1 Height: 12"



ELECTRICAL

Bulb 1
Bulb Included: No
Socket: E26 Medium Base
Bulb Type: T10-9
Max Wattage: 15
Bulb Quantity: 2
Wire Length: 500mm
Cord Type: ! New Cord Type
Dimmer Type: Incandescent
Switch Type: ON/OFF STOMP SWITCH
Gem Box Required (2"x3"): Yes
Dark Sky: Yes
Convertible: No

CRI: 66
Color Temp.: 66k
Lumens: 66
Title 24: Yes
Field Serviceable: No
Voltage: 120

Voltage: 120
Gem Box: Required

Battery
Battery Powered: Yes
Battery Included: Yes
Battery Life: ! New Battery Life !

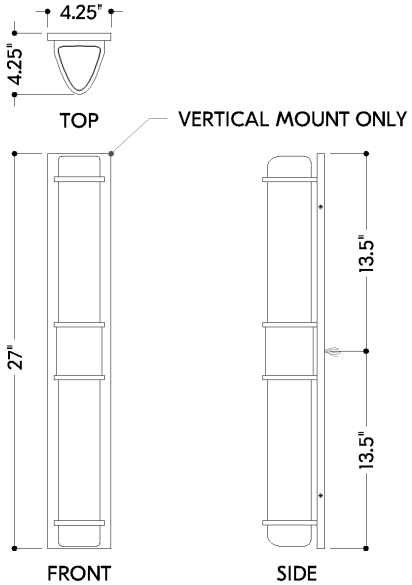

TOTTENVILLE

1127-PN

HUDSON VALLEY LIGHTING

SHIPPING

Carton 1: 34" x 26" x 10"
Carton 1 Weight: 15lb
Shipping Method: Ground
Country of Origin: VN