GRANBY

1113-OB

HUDSON VALLEY LIGHTING

Featuring an exquisite Foschia glass pendant, Granby creates a captivating focal point overhead. Embodying a retro feel, its generously sized upturned bowl structure, crafted from ribbed glass, illuminates a wide area. The supporting chain is available in two sizes and two classic finishes; Aged Brass and Old Bronze.

FINISHES

OLD BRONZE

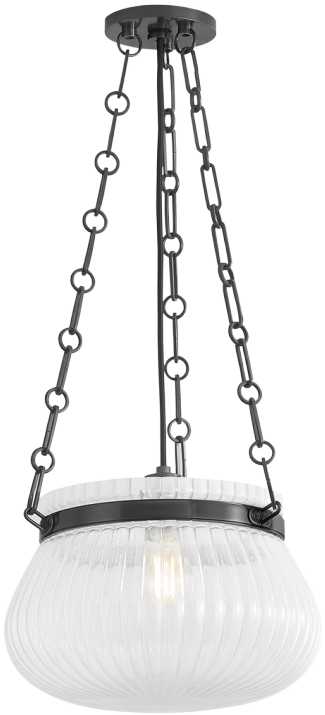

DIMENSIONS / SPECS

Height: 66"
Width/Diameter: 66"
Length: 66"
Minimum Height: 66"
Maximum Height: 66"
Canopy/Backplate: 4.75"
Hanging Type: 108" Premium Composite Cord
Product Weight: 66lb
Extension: 66"
Top to Center: 66"
Canopy/Backplate Shape: Round
Sloped Ceiling Compatible: No
Living Finish: Yes
Uplight Only: Yes
Min Extension: 66"
Max Extension: 66"

Shade 1: Ribbed Glass
Shade 1 Finish: Clear
Shade 1 Top Width: 10"
Shade 1 Height: 8.5"

ELECTRICAL

Bulb 1
Bulb Included: No
Socket: E26 Medium Base
Bulb Type: A19
Max Wattage: 15
Bulb Quantity: 1
Wire Length: 500mm
Cord Type: ! New Cord Type
Dimmer Type: Incandescent
Switch Type: ON/OFF STOMP SWITCH
Gem Box Required (2"x3"): Yes
Dark Sky: Yes
Convertible: No
CRI: 66
Color Temp.: 66k
Lumens: 66
Title 24: Yes
Field Serviceable: No
Voltage: 120 VAC

Voltage: 120 VAC

Battery
Battery Powered: Yes
Battery Included: Yes
Battery Life: ! New Battery Life !

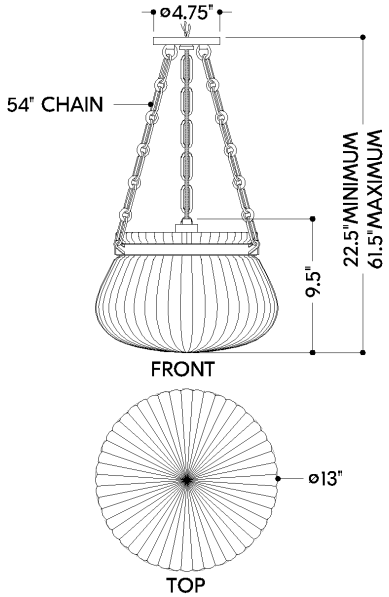

GRANBY

1113-OB

HUDSON VALLEY LIGHTING

SHIPPING

Carton 1: 21" x 16" x 16"
Carton 1 Weight: 12lb
Shipping Method: Ground
Country of Origin: VN